REVISION RECORD				
REV	ECO	DATE	DESCRIPTION	DRFT
A1	------	11/21/08	RELEASE	

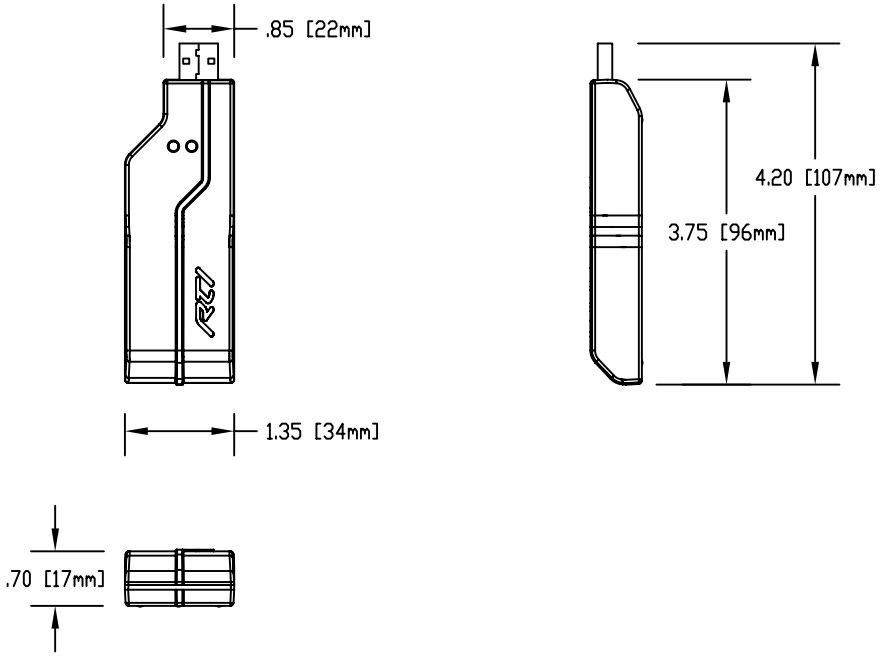

UNLESS OTHERWISE SPECIFIED DIMENSIONS ARE IN INCHES	THIS DRAWING IS THE PROPERTY OF REMOTE TECHNOLOGIES INC. ANY REPRODUCTION IN PART OR AS A WHOLE WITHOUT THE WRITTEN PERMISSION OF REMOTE TECHNOLOGIES INC. IS STRICTLY PROHIBITED.	REMOTE TECHNOLOGIES INC.	
TOLERANCES EXCEPT AS NOTED: MM: 0 ±, .0 ±, .00 ±; INCHES: .0 ±, .00 ±, .000 ±	MODEL: ZB-PRO	TITLE: ZB-PRO OVERALL DIMENSIONS	
ANGLES ±	DFTG DATE 11/21/08		
MATERIAL: SEE INDIVIDUAL PARTS	CHKD DATE		
FINISH	MFG DATE		
	APPVL DATE		
	INTERPRET PER ANSI Y14.5 THIRD ANGLE PROJECTION	SIZE D; PART NO. TBD; DOCUMENT NO. TBD; REV A1	
		DO NOT SCALE DRAWING; BOM LISTS ☐ YES ☐ NO; SHT 1 OF 1	

DOCUMENT NO. TBD